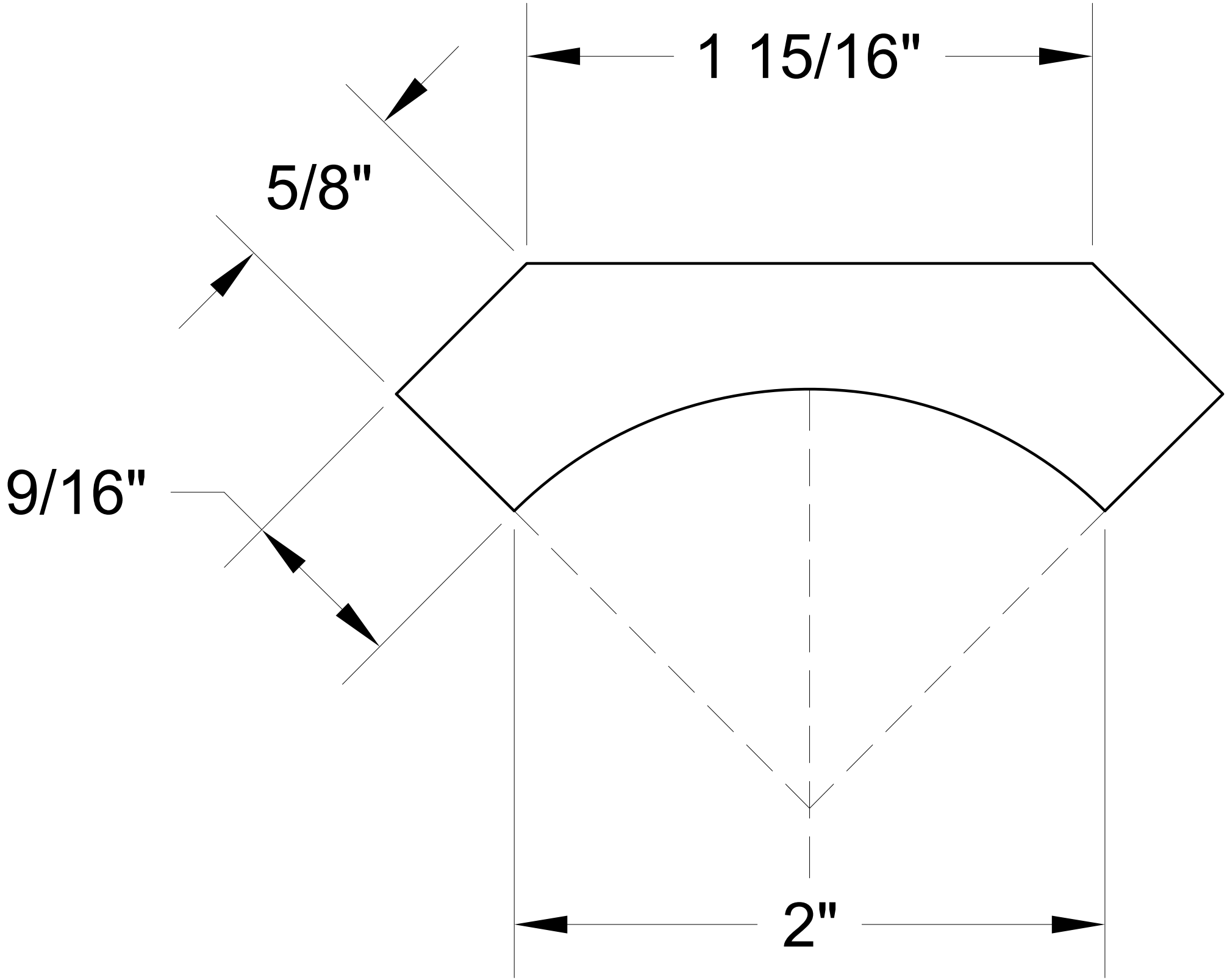
1 15/16"
5/8"
9/16"
2"